CREST 2837 - "T" 41 TOERAIL

Crest Aluminum Products Inc
Part No. C-2837
Die No. CTP 34
T41 Toe Rail

MARINE PRODUCTS
www.crestaluminum.com

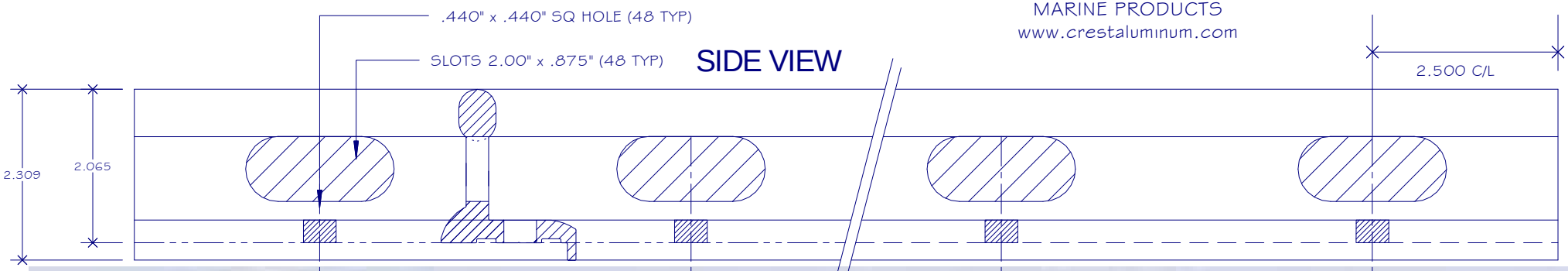

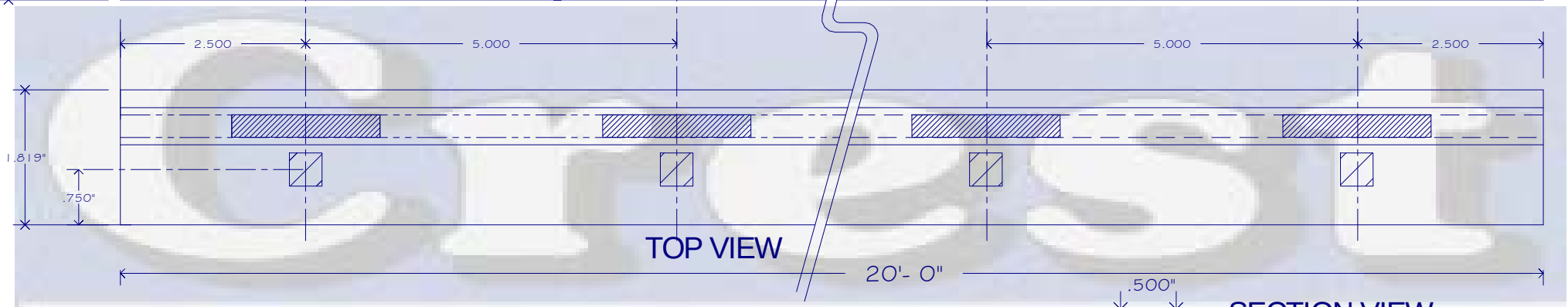

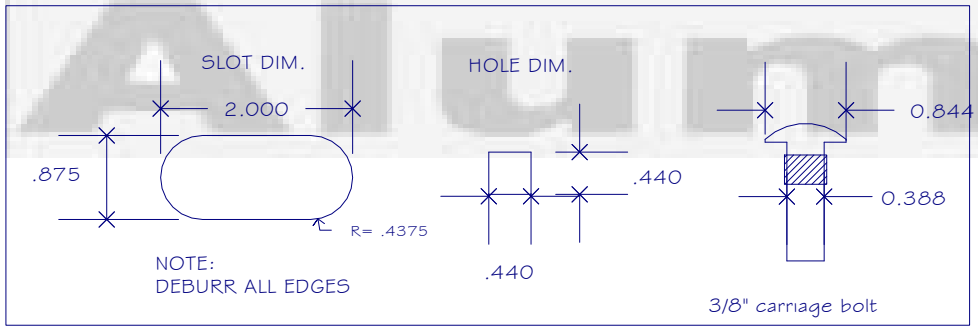

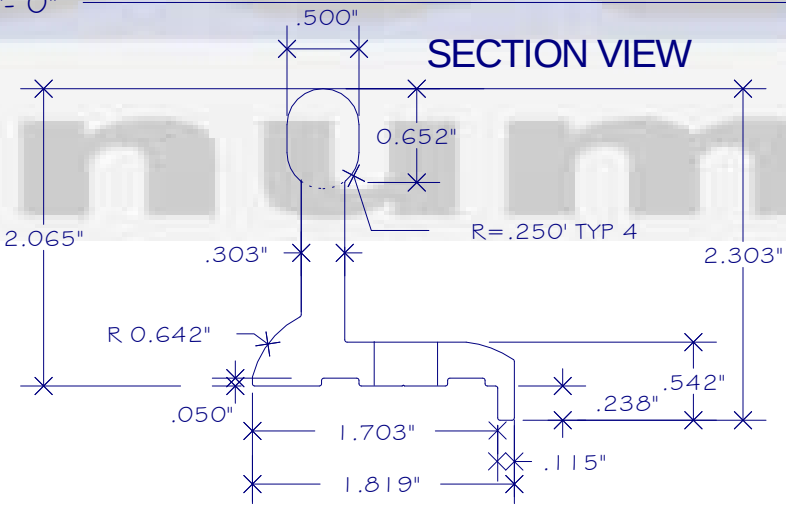

Notes:

Alloy:	6061 T-6
Finish:	Hard Coat Anod.
Lengths:	20'-0"
Slots:	5" on center
Holes:	5" on center
WT. / FT.	1.402 lb/ft

PART NO	C-2837	Crest Aluminum Products Inc 8287 Tyler Blvd Mentor OH 44060 USA	REVISIONS	DATE
ALLOY	6061 T-6	JOB NO. / DATE: 02-14-08		
FINISH	BLK HDCT ANOD			
LENGTHS	20'-0"	CUSTOMER / PROJECT CTP 2837		
UNSPEC RADIUS	.016"			
DRAWING BY:	J. M. ALLIN			

© Crest Aluminum Products Inc 2006 J. M. Allin